Please read this document carefully before using this product. The guarantee will be invalidated if the device is damaged by not following instructions detailed in the manual. The company shall not be responsible for any damage or losses however caused, which may be experienced as a result of the installation or use of this product.

ENDA ERPA1 Series Power Regulators

Thank you for choosing **ENDA ERPA1** series power regulators.

* 40-50-70A AC load current.
* 280-480-500V AC load voltage.
* 0/4-20mA, 0/1-5V DC, 0/2-10V DC or 1kΩ ~ 10kΩ potentiometer input.
* 4 Digits LED display.
* Phase angel or zero-cross controlled.
* Soft Start or Kick Start feature.
* Overheat alarm output.
* Varistor protection for peak voltages.
* RS485 ModBus communication feature (Optional).
* CE marked according to European Norms.

Order Code

ERP A 1 - 5 50 - F - RS

Product Basic Code	
Rail mountable	ER

Load voltage	
AC	A

Number of pole	
Single pole	1

Load voltage	
180-280V AC	2
180-480V AC	4
180-500V AC	5

Load Current	
40A AC	40
50A AC	50
70A AC	70

Fan	
Fan	F

Communication	
RS485 ModBus (Optional)	RS

CE

RoHS Compliant

ENVIRONMENTAL CONDITIONS	
Ambient/storage temperature	-25... +60 °C / -30... +100 °C (Shouldn't be icing and condensation in ambient.)
Relative humidity	50% Relative humidity for +40°C temperature increases up to 90% at +20°C. (Shouldn't be condensation)
Pollution degree	2
Overvoltage category	II
Altitude	Max. 1000m
Protection	IP20 According to EN60529

Do not use the device in locations subject to corrosive and flammable gases.

OUTPUT				
Order code	ERPA1-240-F	ERPA1-440-F	ERPA1-550-F	ERPA1-570-F
Load Current, AC51/25°C (Arms)	40	40	50	70
Load voltage (Vrms)	180 - 280	180 - 480	180 - 500	
Overload current t=1s/25°C (Arms)	150	110	180	400
Non rep.surge current/25°C (Arms)	400	290	270	600
On-state voltage drop (Vrms)	1,6	1,8	1,8	
Leakage current (mArms)	5	8	10	15
I^2t for fusing t=10ms (A^2s)	880	610	720	4000
Frequency (Hz)	50 - 60	50 - 60	50 - 60	
Power factor (CosΦ)	>0,75	>0,75	>0,75	
Minimum operating current (mArms)	160	200	300	400
Alarm output	3A, 250V AC, NO or NC selection			

INPUT	
Input signal	0/4-20mA, 0/1-5V DC, 0/2-10V DC or 1kΩ ~ 10kΩ potentiometer. (Device may be damaged at ±12V DC and above voltages)
Transmission signal	≥0,2mA (for mA input), ≥0,08V (for V input)
Drop-out signal	≤0,18mA (for mA input), ≤0,075V (for V input)
Turn-on time	15ms
Dynamic input impedance	≤100Ω (for mA input), ≥10kΩ (for V input)
Protection	Protection feature for reverse connection is available.

GENERAL	
Order code	ERPA1-xxx-F-xx
Power supply	90-250V AC, 50/60Hz
Dimensions	W46 x H110 x D117mm (for ERPA1-x40-F and ERPA1-550-F) , W79 x H120 x D132mm (for ERPA1-570-F)
Weight	Approx. 450g (for ERPA1-x40-F and ERPA1-550-F) , Approx. 550g (for ERPA1-570-F) (boxed)
Isolation Voltage	2500 Vrms between I/O terminals for 1 min.
Connection	For power line 16mm² cable (with 25mm² cable terminal) cable, for signal line can be connected 4mm² cable.
Terminal screw torque	Max. 1,2Nm
Product standard	EN 60947-4-3
Mounting	Rail mountable (EN60715,TH35 or G-32)
Enclosure material	Self extinguishing plastics (According to EN 60695-11-10 V-O)
Fan (Optional)	Fan is controlled with thermostat and works at temperatures over 50°C.

While cleaning the device,solvents (thinner,benzine,acid etc.) or corrosive materials must not be used.

SİSEL MÜHENDİSLİK ELEKTRONİK SAN. VE TİC. A.Ş.
Şerifali Mah. Barbaros Cad. No:18 Y.Dudullu 34775
ÜMRANİYE/İSTANBUL-TURKEY
Tel : +90 216 499 46 64 Pbx. Fax : +90 216 365 74 01
url : www.enda.com.tr

DIMENSIONS

For ERPA1-240-F , ERPA1-440-F and ERPA1-550-F ;

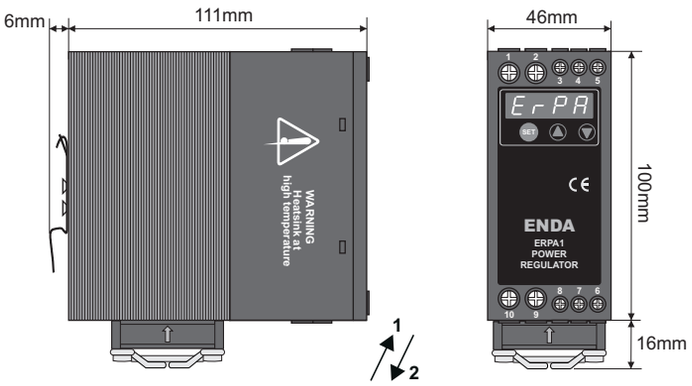

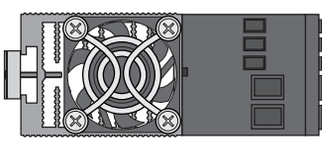

- For removing the device from the panel;
  Pull up in direction **1**
- For mounting the device to the panel;
  Push down in direction **2**

For ERPA1-570-F;

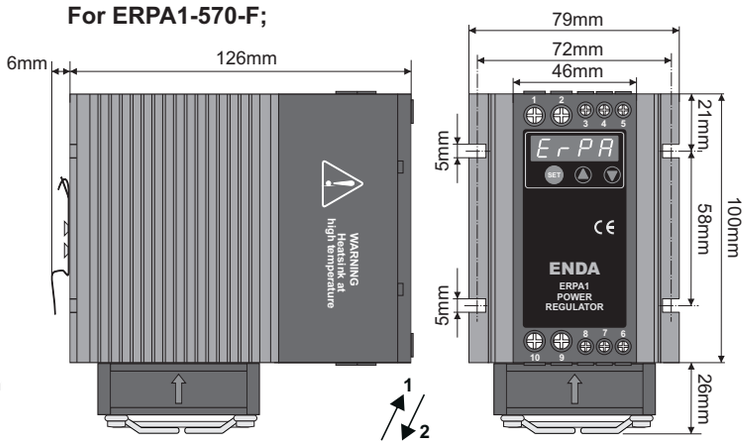

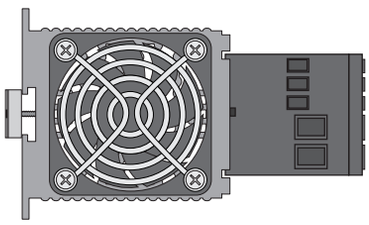

- For removing the device from the panel;
  Pull up in direction **1**
- For mounting the device to the panel;
  Push down in direction **2**

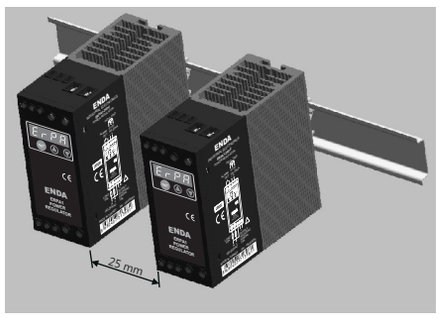

APPLICATIONS

For ERPA1-240-F-RS;

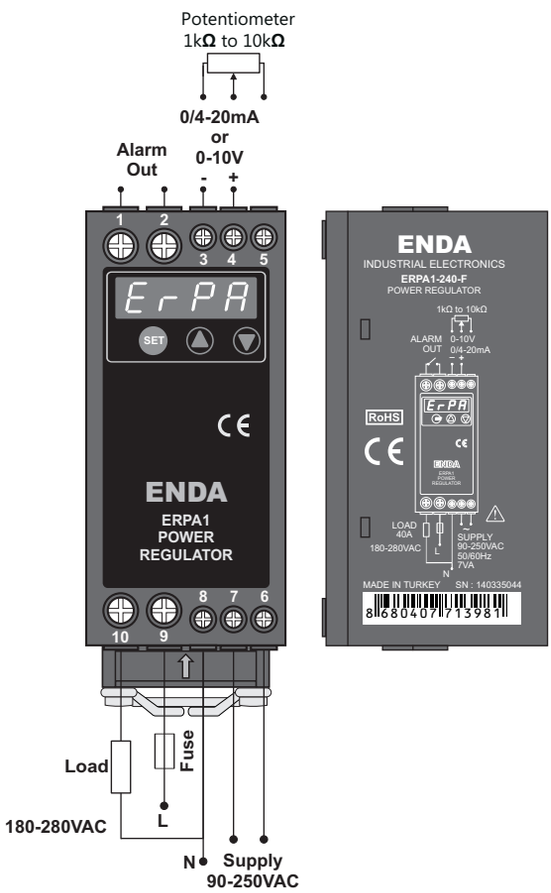

For ERPA1-440-F;

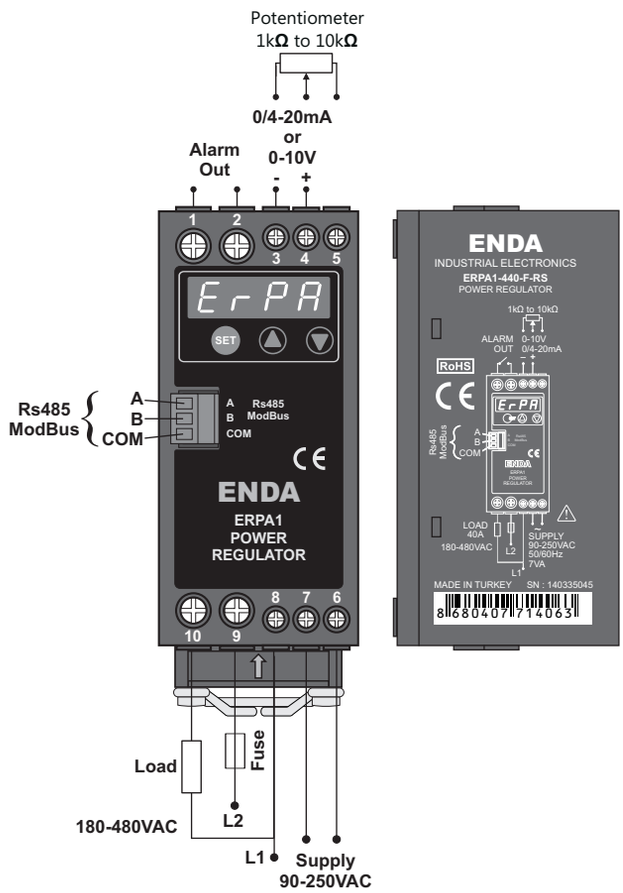

SİSEL MÜHENDİSLİK ELEKTRONİK SAN. VE TİC. A.Ş.
Şerifali Mah. Barbaros Cad. No:18 Y.Dudullu 34775
ÜMRANİYE/İSTANBUL-TURKEY
Tel : +90 216 499 46 64 Pbx. Fax : +90 216 365 74 01
url : www.enda.com.tr

Run Mode

o. 30 — d.isP.=out — Output as Percentage.

A. 3.0 — d.isP.=curr. — Output as Current.

Manual Run Mode

n. 50 → ▲ → n. 51 → ▼ → n. 50

If SET key is pressed in Run Mode for 3 seconds, Manuel Run Mode is entered. Flashing manual output value is set to the desired value with the ▲▼ keys. When SET key is pressed, desired set value is saved and Run Mode is returned.

If, SET and than ▲ keys are pressed, Programming Mode is entered.

If 20 seconds have without pressed any key, information is saved automatically and returned to Run Mode.

Or; if pressed ▲ and than ▼ keys, access to menu headers are entered. By pressing SET and than ▲ keys are pressed together, information is saved and returns to Run Mode.

Programming Mode

conF. → SET → out.c. → SET → conn. → SET → SECU. → SET

- inP. — Input selection.
- d.isP. — Run Mode display selection.
- cu.h.1. — (If d.isP.=curr.) Max. current value for connected load in curr. selection
- c.tYP. — Control type selection.
- st.tY. — Start type selection.
- st.t.1. — Start duration.
- AL.ou. — Alarm relay selection.
- Err.c. — Quit method from error status.

- ou.h.1. — Max. acceptable value for output.
- ou.L.o. — Min. acceptable value for output.
- ou.oF. — Output offset value.

⚠ ERPA device does not measures the load current. It indicates the calculated current value for according to the entered cu.h.1. parameter.

- d.Adr. — Modbus address.
- bAud — Modbus speed.

- codE. — Security menu access code is 124.
- A.con. — Control menu security parameter.
- A.out. — Data menu security parameter.
- A.cnn. — Communication menu security parameter.

Parameter Adjustment Method

If held down SET key, the selected parameter will flash and can be adjusted to desired value with the ▲▼ keys.

ou.h.1. → SET → 50 → ▲ → 51 → ▼ → 50

If ▲▼ keys are pressed for 0.4 seconds then the parameter is changed faster.

Error Messages

- Err.1 — When the device overheats, Err.1 appears on display and enters to error mode and alarm relay triggers.
- Err.2 — If input values are selected as 4-20 or 0-20 and if above current flows, Err.2 appears on display and enters to error mode and alarm relay triggers.
- * Err.3 — If input value is selected as nbus and if master device not response for 15 seconds, Err.3 appears on display and enters to error mode and alarm relay triggers.

If Err.c parameter is set as StoP, only when SET key is pressed, If Err.c parameter is set as Auto, when SET key is pressed or when the error disappeared, it returns to Run Mode. When return to the operating mode, if overheating continues device passes to the Eror Mode.

PARAMETERS TABLE

Parameter	Options / [units]	Description	Default values
		conF. Configuration menu	
inP.	4-20	4-20mA	0-10
	0-20	0-20mA	
	0-10	0-10V	
	1-5	1-5V	
	2-10	2-10V	
	0-5	0-5V	
	Pot.	Potentiometer input.	
	nAnu.	Manual Run Mode.	
	nbus.	Modbus input	
d.isP.	out	Output as Percentage in Run Mode.	out
	curr.	Output as Current in Run Mode.	
cu.h.1.	[Ampere]	Takes a value between 0 and load current.	(**)
c.tYP.	PhAS.	Control with phase angle.	PhAS.
	croS.	Control with Zero-cross.	
st.tY.	SoFt	Output is energized with soft start.	SoFt
	ic.St.	Output is energized with kick start.	
	n.SFt.	Output is energized with soft start according to manual output value.	
	n.ic.S.	Output is energized with kick start according to manual output value.	
st.t.1.	[Second]	Start duration (0 - 200).	4
AL.ou.	no.	Alarm relay normally open.	no.
	nc.	Alarm relay normally closed.	
Err.c.	Auto	Returns to Run Mode when error disappeares.	Auto
	StoP	Remains in Eror Mode when error disappeares.	
		out.c. Output Control Menu	
ou.h.1.	[%]	Takes a value between ou.L.o. and 100.	100
ou.L.o.	[%]	Takes a value between 0 . and ou.h.1.	0
ou.oF.	[%]	Takes a value between -50. and 50.	0
		conn. Communication Menu (*)	
d.Adr.		Takes a value between 1. and 247 .	1
bAud		1200, 2400, 4800, 9600 and 19200 values are selectable.	9600
		SECU Security Menu	
A.con.	nonE	Configuration menu invisible.	P.YES
	P.YES	Configuration menu can be changed.	
	P.no	Only configuration menu visible.	
A.out.	nonE	Output control menu invisible.	P.YES
	P.YES	Output control menu can be changed.	
	P.no	Only Output control menu visible.	
A.cnn.	nonE	Communication menu invisible.	P.YES
	P.YES	Communication can be changed.	
	P.no	Only communication menu visible.	

(*) This menu is only available on ModBus featured devices.

(**) Takes 40, 50 or 70 values for according to device models.

If ▼ key is held down while the device is powered up, d.PAr message will appears and factory settings will be restored.

Control Method

With Phase Angle Control

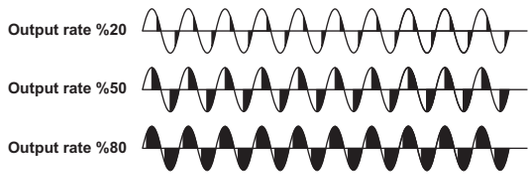

Endüktif ve değişken rezistif yüklerde kullanılan, kesintisiz enerji verilerek yapılan oransal kontrol yöntemidir (cosØ <1).
Bu yönteminin dezavantajı yüksek elektiriksel gürültülere sebep olmasıdır.

With Zero-Crossing Control

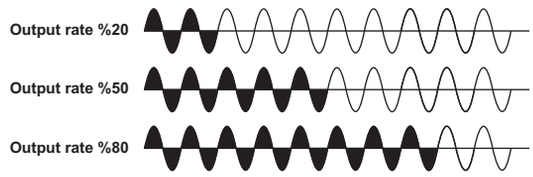

Rezistif ve kapasitif yüklerde kullanılan oransal kontrol yöntemidir (cosØ =1).
Bu yönteminin avantajı düşük elektiriksel gürültülere sebep olmasıdır.

Start Method

Soft Start

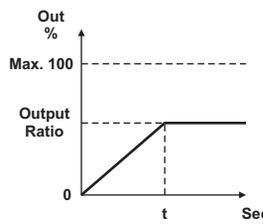

Output Ratio : Manually set or changed by the input signal is output as a percentage.

t : Start time (st.t 1.)

Kick Start

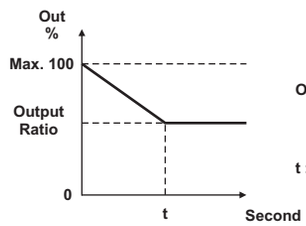

Output Ratio : Manually set or changed by the input signal is output as a percentage.

t : Start time (st.t 1.)

ENDA ERPA1 MODBUS PROTOCOL ADDRESS MAP

1.1 Memory Map for Holding Registers

Holding Register addresses Decimal (Hex)	Data type	Data content	Parameter Name	Read / Write permission
0000d (0000h)	Byte	Manuel output (adjustable between ou.Lo. and ou.h 1.).	--	Readable / Writable
0001d (0001h)	Byte	Input selection (0: 4-20mA, 1: 0-20mA, 2: 0-10V, 3: 1-5V, 4: 2-10V, 5: 0-5V, 6: potentiometer).	inP.	Readable / Writable
0002d (0002h)	Byte	Display selection on Run Mode (0: output as percent, 1: output as current, 2: set manually in percent output).	disP.	Readable / Writable
0003d (0003h)	Byte	Start type selection.(0: soft start according to input signal, 1: kick start according to input signal, 2: soft start according to manual output, 3: kick start according to manual output)	st.ty	Readable / Writable
0004d (0004h)	Byte	Kick-Soft start duration (adjustable between 0 and 200 seconds).	st.t 1.	Readable / Writable
0005d (0005h)	Byte	Max. acceptable value for output. (Acceptable between ou.Lo. **and** 100).	ou.h 1.	Readable / Writable
0006d (0006h)	Byte	Min. acceptable value for output. (acceptable between 0 and ou.hi.).	ou.Lo.	Readable / Writable
0007d (0007h)	Byte	Max. output current. (Acceptable value between 0 and load current).	cu.h 1.	Readable / Writable
0008d (0008h)	Byte	Output offset value. (Adjustable between -50 and 50).	ou.oF.	Readable / Writable
0009d (0009h)	Byte	Security parameter for configuration menu (0: Menu invisible, 1: Menu programmable 2: Only configuration menu visible).	A.con.	Readable / Writable
0010d (000Ah)	Byte	Output parameter for configuration menu (0:Menu invisible, 1: Menu programmable 2: Only configuration menu visible).	A.out.	Readable / Writable
0011d (000Bh)	Byte	Communication parameter for configuration menu (0: Menu invisible, 1: Menu programmable 2: Only configuration menu visible).	A.cnn.	Readable / Writable
0012d (000Ch)	Byte	Modbus device address (adjustable between 0 and 247).	d.Adr.	Readable / Writable
0013d (000Dh)	Byte	Modbus baud rate (0: 1200, 1: 2400, 2: 4800, 3: 9600, 4: 19200)	bAud	Readable / Writable

1.2 Memory Map for Coils

Coil addresses	Data type	Data content	Parameter Name	Read / Write permission
(0000)h	Bit	Control selection type (0: Phase angel, 1: Zero-cross)	c.tYP.	Readable / Writable
(0001)h	Bit	Alarm relay selection (0: NO, 1: NC)	A.Lou.	Readable / Writable
(0002)h	Bit	Alarm control management (0: Returns to Run Mode when error disappeares., 1: Remains in Eror Mode when error disappeares.)	Err.c.	Readable / Writable

1.3 Memory Map for Input Registers

Input register address	Data type	Data content	Parameter Name	Read / Write permission
(0000)h	Byte	Output value as percent	--	Only Readable
(0001)h	Byte	Current value as percent	--	Only Readable

⚠ **Note:** Modbus communication is setted as; parity bit = none, data bit = 8 and stop bit = 1 and can not be changed.

SİSEL MÜHENDİSLİK ELEKTRONİK SAN. VE TİC. A.Ş.
Şerifali Mah. Barbaros Cad. No:18 Y.Dudullu 34775
ÜMRANİYE/İSTANBUL-TURKEY
Tel : +90 216 499 46 64 Pbx. Fax : +90 216 365 74 01
url : www.enda.com.tr